11807 81-86 SAAB 900 INCLUDING TURBO

11/13/2017

GROSS LOAD CAPACITY WHEN USED AS A WEIGHT CARRYING HITCH: 2,000 LBS. TRAILER WEIGHT & 200 LBS. TONGUE WEIGHT.

*****DO NOT EXCEED VEHICLE MANUFACTURER'S RECOMMENDED TOWING CAPACITY.*****

WARNING: ALL NON-TRAILER LOADS APPLIED TO THIS PRODUCT MUST BE SUPPORTED BY AUXILIARY STABILIZING STRAPS.

**** FAILURE TO PROPERLY SUPPORT NON-TRAILER LOADS WILL VOID PRODUCT WARRANTY****

HAVING INSTALLATION QUESTIONS? CALL TECHNICAL SUPPORT AT 1-800-798-0813

Parts List

ITEM	QTY	PART NUMBER	DESCRIPTION
1	2	M10 - 1.5 x 30 HEX	HEX BOLT
2	2	7/16 LOCK WASHER	HELICAL LOCK WASHER
3	2	M10 - 1.50 HEX-NUT	Hex Nut
4	2	3/8" LOCK WASHER	LOCK WASHER
5	2	3/8" WASHER	WASHER
6	2	3/8 - 16 x 1 1/4	HEX BOLT
7	1	CM-NP5W	SPACER WELDMENT ASSEMBLY

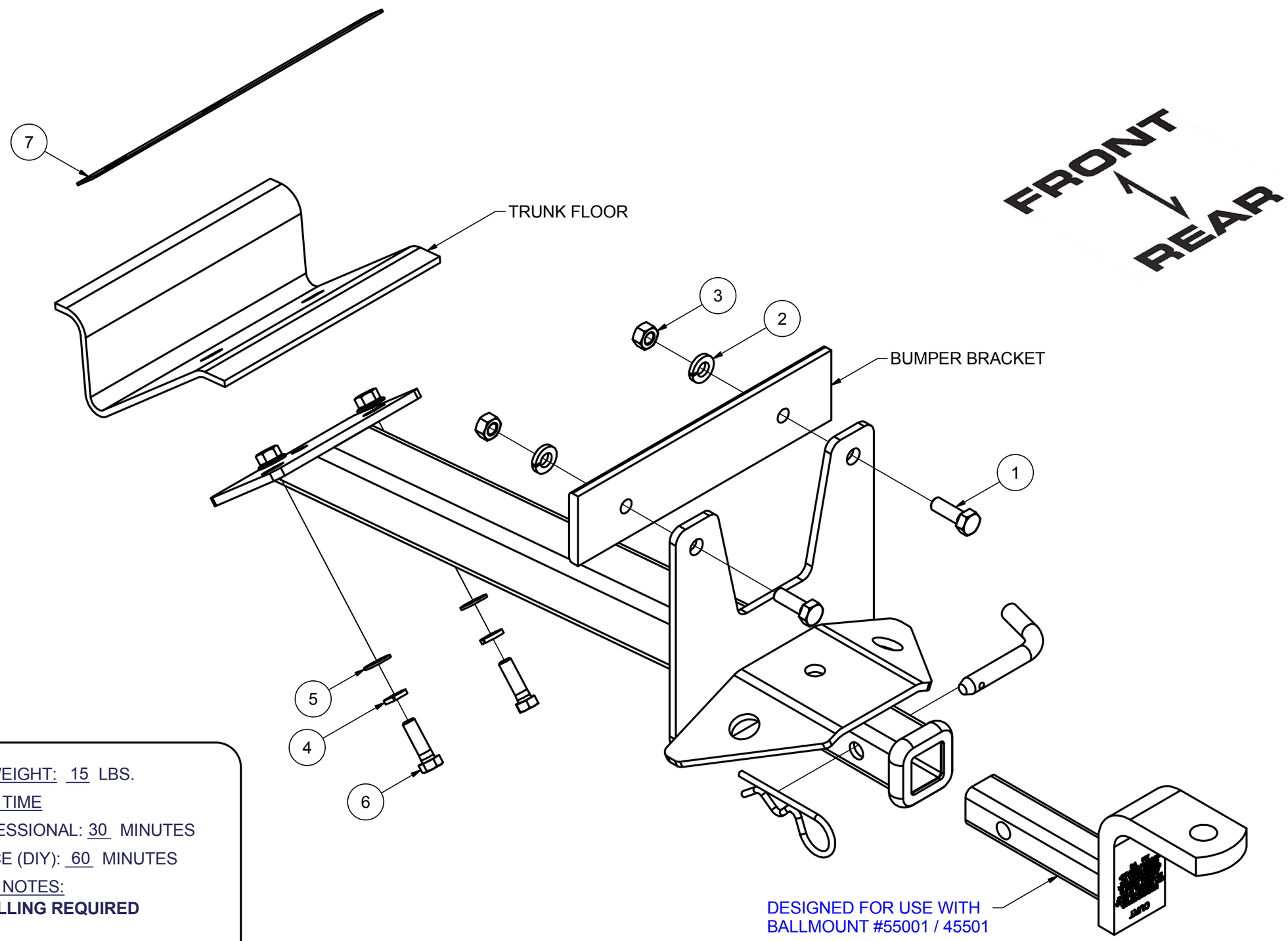

HITCH WEIGHT: 15 LBS.

INSTALL TIME

PROFESSIONAL: 30 MINUTES

NOVICE (DIY): 60 MINUTES

INSTALL NOTES:

-NO DRILLING REQUIRED

INSTALLATION STEPS

1. Remove two (2) existing 10 mm screws at either side of car's rear bumper bracket at rear panel. On certain models it will be necessary to remove a bolted on bracket under floor at rear center of car.

2. Using fasteners provided, mount hitch to car at rear panel as shown. Using fasteners and nut plate provided, mount hitch at existing Saab bracket under floor.

3. Torque all 3/8" fasteners to 45 lb-ft. and all M10 fasteners to 45 lb-ft.

PERIODICALLY CHECK THIS RECEIVER HITCH TO ENSURE THAT ALL FASTENERS ARE TIGHT AND THAT ALL STRUCTURAL COMPONENTS ARE SOUND.

Curt Manufacturing Inc., warrants this product to be free of defects in material and/or workmanship at the time of retail purchase by the original purchaser. If the product is found to be defective, Curt Manufacturing Inc., may repair or replace the product, at their option, when the product is returned, prepaid, with proof of purchase. Alteration to, misuse of, or improper installation of this product voids the warranty. Curt Manufacturing Inc.'s liability is limited to repair or replacement of products found to be defective, and specifically excludes liability for incidental or consequential loss or damage.